Fusionsolar

Utility Smart String Grid Forming ESS Solution

HUAWEI

SOLAR.HUAWEI.COM

HUAWEI

About Huawei

Huawei is a leading global provider of information and communications technology (ICT) infrastructure and smart devices. With integrated solutions across four key domains – telecom networks, IT, smart devices, and cloud services – we are committed to bringing digital to every person, home and organization for a fully connected, intelligent world. Huawei's end-to-end portfolio of products, solutions and services are both competitive and secure. Through open collaboration with ecosystem partners, we create lasting value for our customers, working to empower people, enrich home life, and inspire innovation in organizations of all shapes and sizes. At Huawei, innovation focuses on customer needs. We invest heavily in basic research, concentrating on technological breakthroughs that drive the world forward.

Employees
208,000+

R&D Personnel
54%

Countries
170+

Best Global Brands
59

R&D Investment
6

Most Innovative Companies
8

FusionSolar Utility Smart String Grid Forming ESS Solution

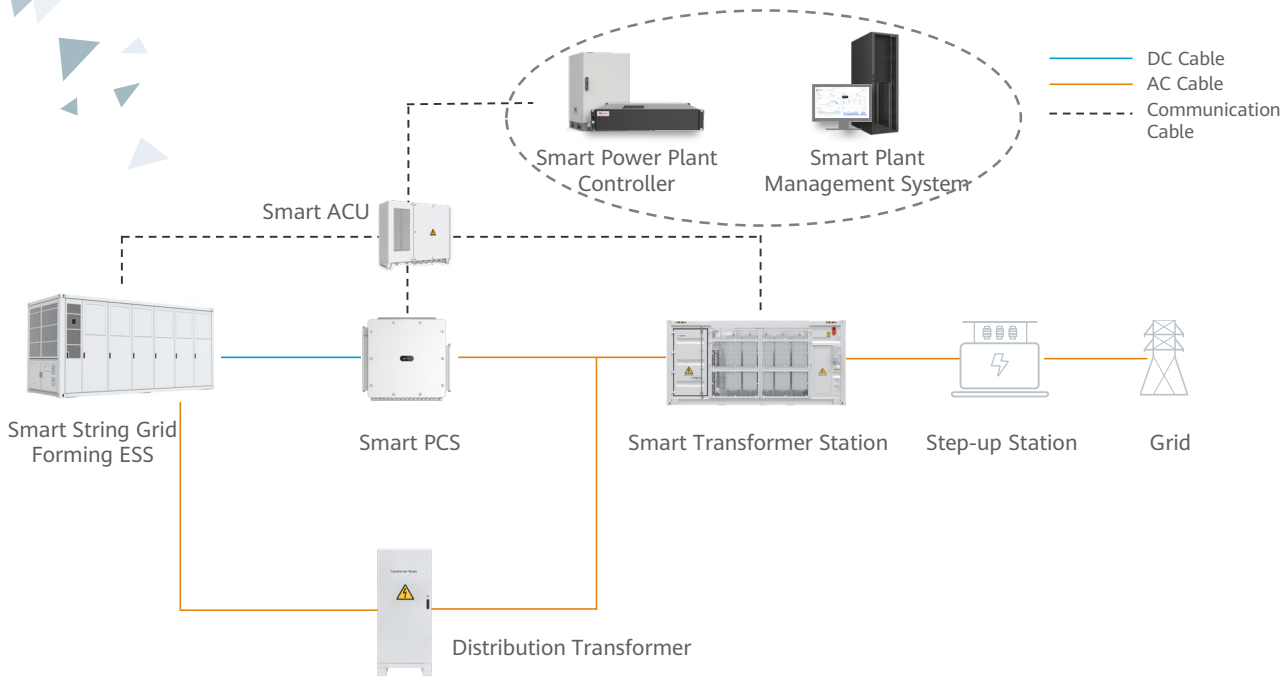

All-architecture safety | **All-scenario Grid Forming** | **All-lifecycle cost-effectiveness** | **All-rounder Smart O&M**

Model: LUNA2000-5015-2S
Smart String Grid Forming ESS

All-architecture Safety

All-scenario Grid forming

All-lifecycle Cost-effectiveness

All-rounder Digitalization

Battery Container	
Model	LUNA2000-5015-2S
DC Rated Voltage	1,331.2 V
DC Max. Voltage	1,500 V
Nominal Energy Capacity	5,015 kWh
Charge & Discharge Rate	≤ 0.5 CP
Rated Power	2,507.5 kW
Dimension (W x H x D)	6,058 x 2,896 x 2,438 mm
Weight	< 43 t
Operation Temperature Range	-30° C ~ 55° C
Storage Temperature Range	-40° C ~ 60° C
Relative Humidity	0 ~ 100% (Non-condensing)
Max. Operating Altitude	4,700 m
Cooling Method	Liquid Cooling
Fire Suppression System	Water Sprinkler, NOVEC 1230
Communication Interface	Ethernet / SFP
Communication Protocol	Modbus TCP
Protection Degree	IP55
Anti-corrosion Degree	C5-Medium
Standards Compliance	
RoHS, IEC62477-1, IEC62040-1, IEC61000-6-2, IEC62933-5-2, UL9540A, IEC62619, UN38.3, etc.	
Battery Pack	
Cell Material	LFP
Number of Cell	104
Nominal Capacity	314 Ah / 104.49 kWh
Protection Degree	IP65
Weight	<710 kg
Dimensions (W x H x D)	785 x 249 x 2135 mm

Model: LUNA2000-2236-1S
Smart String Grid Forming ESS

All-architecture Safety

All-scenario Grid forming

All-lifecycle Cost-effectiveness

All-rounder Digitalization

Battery Container	
Model	LUNA2000-2236-1S
DC Rated Voltage	1,331.2 V
DC Max. Voltage	1,500 V
Nominal Energy Capacity	2,236 kWh
Charge & Discharge Rate	≤ 1 CP
Rated Power	2,236 kW
Dimension (W x H x D)	6,058 x 2,896 x 2,438 mm
Weight	< 28 t
Operation Temperature Range	-30° C ~ 55° C
Storage Temperature Range	-40° C ~ 60° C
Relative Humidity	0 ~ 100% (Non-condensing)
Max. Operating Altitude	4,700 m
Cooling Method	Liquid Cooling
Fire Suppression System	Water Sprinkler, NOVEC 1230
Communication Interface	Ethernet / SFP
Communication Protocol	Modbus TCP
Protection Degree	IP55
Anti-corrosion Degree	C5-Medium
Standards Compliance	
RoHS, IEC62477-1, IEC62040-1, IEC61000-6-2, IEC62933-5-2, UL9540A, IEC62619, UN38.3, etc.	
Battery Pack	
Cell Material	LFP
Number of Cell	52
Nominal Capacity	280 Ah / 46.59 kWh
Protection Degree	IP65
Weight	< 410 kg
Dimensions (W x H x D)	785 x 249 x 2135 mm

Model: LUNA2000-4472-2S
Smart String Grid Forming ESS

All-architecture Safety

All-scenario Grid forming

All-lifecycle Cost-effectiveness

All-rounder Digitalization

Battery Container	
Model	LUNA2000-4472-2S
DC Rated Voltage	1,331.2 V
DC Max. Voltage	1,500 V
Nominal Energy Capacity	4,472 kWh
Charge & Discharge Rate	≤ 0.5 CP
Rated Power	2,236 kW
Dimension (W x H x D)	6,058 x 2,896 x 2,438 mm
Weight	< 43 t
Operation Temperature Range	-30° C ~ 55° C
Storage Temperature Range	-40° C ~ 60° C
Relative Humidity	0 ~ 100% (Non-condensing)
Max. Operating Altitude	4,700 m
Cooling Method	Liquid Cooling
Fire Suppression System	Water Sprinkler, NOVEC 1230 (Optional)
Communication Interface	Ethernet / SFP
Communication Protocol	Modbus TCP
Protection Degree	IP55
Anti-corrosion Degree	C5-Medium
Standards Compliance	
RoHS, IEC62477-1, IEC62040-1, IEC61000-6-2, IEC62933-5-2, UL9540A, IEC62619, UN38.3, etc.	
Battery Pack	
Cell Material	LFP
Number of Cell	104
Nominal Capacity	280 Ah / 93.18 kWh
Protection Degree	IP65
Weight	<700 kg
Dimensions (W x H x D)	785 x 249 x 2135 mm

Model: LUNA2000-2.0MWH Series
Smart String Grid Forming ESS

All-architecture Safety

All-scenario Grid forming

All-lifecycle Cost-effectiveness

All-rounder Digitalization

Battery Container			
Model	LUNA2000-2.0MWH-4H1	LUNA2000-2.0MWH-2H1	LUNA2000-2.0MWH-1H1
DC Rated Voltage	1,250 V		
DC Max. Voltage	1,500 V		
Nominal Energy Capacity	2,032 kWh		
Charge & Discharge Rate	≤ 0.25 C	≤ 0.5 C	≤ 1 C
Rated Power	508 kW	1,016 kW	2,032 kW
Container Configuration (W x H x D)	6,058 x 2,896 x 2,438 mm		
Container Weight	≤ 30 t		
Operation Temperature Range	-30°C ~ 55°C		
Storage Temperature Range	-40°C ~ 60°C		
Relative Humidity	0 ~ 100% (Non-condensing)		
Max. Operating Altitude	4,000 m		
Cooling Method	Smart Air Cooling		
Configuration of HVAC	2 HVACs	4 HVACs	6 HVACs
Fire Suppression System	Novec 1230™ + Water Sprinkler		
Communication Interface	Ethernet / SFP		
Communication Protocol	Modbus TCP / IEC 104		
Protection Degree	IP55		
Anti-corrosion Protection	C5-Medium		
Low Voltage AC Coupling	Yes	Yes	Yes
Grid Forming	Yes	Yes	Yes
Standards Compliance			
RoHS, IEC62477-1, IEC62040-1, IEC61000-6-2, EN55011, UL9540A, IEC62619, UN3536, etc.			

Model: LUNA2000-1.0MWH-1H1
Smart String Grid Forming ESS

All-architecture Safety

All-scenario Grid forming

All-lifecycle Cost-effectiveness

All-rounder Digitalization

Battery Container	
Model	LUNA2000-1.0MWH-1H1
DC Rated Voltage	1,250 V
DC Max. Voltage	1,500 V
Nominal Energy Capacity	1,016 kWh
Rated Power	1,016 kW
Container Configuration (W x H x D)	6,058 x 2,896 x 2,438 mm
Container Weight	≤ 20 t
Operation Temperature Range	-30°C ~ 55°C
Storage Temperature Range	-40°C ~ 60°C
Relative Humidity	0 ~ 100% (Non-condensing)
Max. Operating Altitude	4,000 m
Cooling Method	Smart Air Cooling
Configuration of HVAC	3 HVACs
Fire Suppression System	Novec 1230™ + Water Sprinkler
Communication Interface	Ethernet / SFP
Communication Protocol	Modbus TCP / IEC 104
Protection Degree	IP55
Anti-corrosion Degree	C5-Medium
Black Start	Yes
Standards Compliance	
RoHS, IEC62477-1, IEC62040-1, IEC61000-6-2, EN55011, UL9540A, , IEC62619, UN3536, etc.	

Smart String Grid Forming ESS
Battery Pack & Smart Rack Controller

Battery Pack[1]	
General	
Cell Material	LFP
Pack Configuration	18S 1P
Rated Voltage	57.6 V
Nominal Capacity	280 Ah / 16.13 kWh
Supported Charge & Discharge Rate	≤ 1 C
Weight	≤ 140 kg
Dimensions (W x H x D)	442 x 307 x 660 mm

Smart Rack Controller[1]	
Battery Side	
Rated Voltage	1,209.6 V
Operating Voltage Range	40 V ~ 1,400 V
Rated Power Voltage Range	1,075 V ~ 1,320 V
Min. Start Voltage	350 V
Bus Side	
Max. DC Voltage	1,500 V
Rated Voltage	1,250 V
Rated Current	275.2 A
Rated Power	344,000 W
General	
Dimensions (W x H x D)	600 x 270 x 820 mm
Weight	≤ 90 kg
Cooling Method	Smart Air Cooling
Protection Degree	IP66

1 - Applies to LUNA2000-2.0MWH / 1.0MWH series models.

Model: LUNA2000-213KTL-H0
Smart PCS

Max. Efficiency 99%

Modular Design

IP66 Protection

Built-in Intelligent Active Breaking Device

Dual-stage Architecture

Smart Grid Forming Algorithm

Efficiency Curve

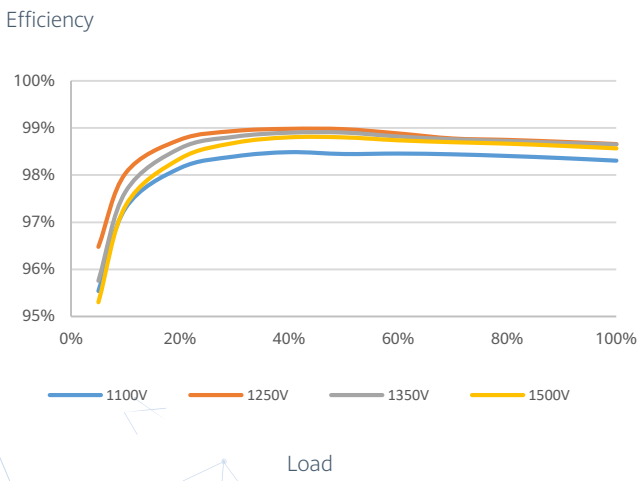

Circuit Diagram

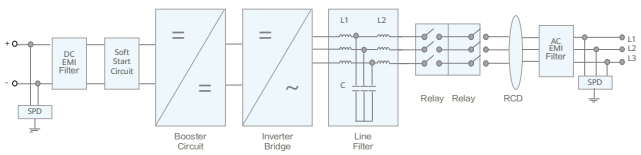

LUNA2000-213KTL-H0

1 - Applies to LUNA2000-4472 series models.

Model: LUNA2000-213KTL-H0

Technical Specifications

Efficiency	
Max. Efficiency	99.01%
DC Side	
Rated DC Voltage	1,331 V
Max. DC Voltage	1,500 V
Operating DC Voltage Range	800 V ~ 1,500 V
Rated Power Operating Voltage Range	1100V-1500V
Max. DC Current	218.5 A
Max. Number of Inputs	1
AC Side	
Rated AC Active Power	213,000 W @40°C; 192,000 W @50°C
Max. Apparent Power	236,400 VA
Rated AC Voltage	800 V
Rated AC Grid Frequency	50 Hz / 60 Hz
Max. AC Current	170.6 A
Adjustable Power Factor Range	-1 ... +1
Max. Total Harmonic Distortion	THD_i ≤ 1.5% (Rated)
Protection	
AC Overcurrent Protection	Yes
DC Reverse-polarity Protection	Yes
Insulation Resistance Detection	Yes
Residual Current Protection	Yes
DC Surge Protection	Type II
AC Surge Protection	Type II
Communication	
Display	LED Indicators, USB data cable + APP
USB	Yes
Communication Protocol	Ethernet, CAN
General	
Dimension (W x H x D)	875 x 865 x 365 mm
Weight	≤ 110 kg
Operating Temperature Range	-25°C ~ 60°C
Cooling Method	Smart Air Cooling
Max. Operating Altitude without Derating	4,700 m
Relative Humidity	0 ~ 100% (Non-condensing)
DC Connector	OT / DT Terminal
AC Connector	OT / DT Terminal
Protection Degree	IP66
Anti-corrosion Degree	C5-Medium
Topology	Transformerless
Standards Compliance	
GB/T 34120, GB/T 34133, IEC/EN62477-1, etc.	

Model: LUNA2000-200KTL-H1
Smart PCS

Max. Efficiency 99%

Modular Design

IP66 Protection

Surge Arresters for DC & AC

Ethernet Communication

Smart Grid Forming Algorithm

Efficiency Curve

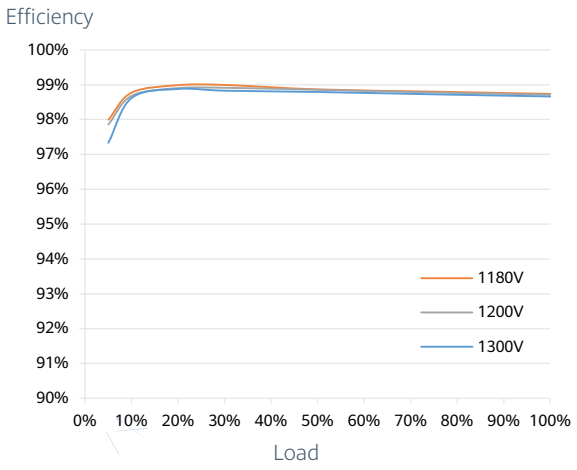

Circuit Diagram

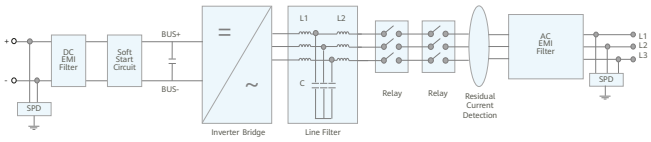

1 - Applies to LUNA2000-2.0MWH / 1.0MWH series models.

Model: LUNA2000-200KTL-H1

Technical Specifications

Efficiency	
Max. Efficiency	99.01%
DC Side	
Rated DC Voltage	1,180 V
Max. DC Voltage	1,500 V
Operating DC Voltage Range	1,180 V ~ 1,500 V
Max. DC Current	207.6 A
Max. Number of Inputs	1
AC Side	
Rated AC Active Power	200,000 W @40°C
Rated AC Voltage	800 Vac, 3W + PE
Rated AC Grid Frequency	50 Hz / 60 Hz
Max. AC Current	173.2 A
Adjustable Power Factor Range	-1 ... +1
Max. Total Harmonic Distortion	THD_i <1% (Rated)
Grid Forming	Yes
Protection	
AC Overcurrent Protection	Yes
DC Reverse-polarity Protection	Yes
Insulation Resistance Detection	Yes
Residual Current Protection	Yes
DC Surge Protection[1]	Type II
AC Surge Protection[1]	Type II
Communication	
Display	LED Indicators, USB data cable + APP
USB	Yes
Ethernet	Yes
General	
Dimensions (W x H x D)	875 x 820 x 365 mm
Weight	< 99 kg
Operating Temperature Range	-25°C ~ 60°C
Cooling Method	Smart Air Cooling
Max. Operating Altitude without Derating	4,000 m
Relative Humidity	0 ~ 100% (Non-condensing)
DC Connector	OT / DT Terminal
AC Connector	OT / DT Terminal
Protection Degree	IP66
Anti-corrosion Protection	C5-Medium
Topology	Transformerless
Standards Compliance	
RoHS, IEC 62477-1, IEC 61000-6-2, IEC 61683, VDE 4120, EN 50549, etc.	

1: Compatible Type II protection class according to IEC / EN 61643-11

Model: LUNA2000-PCS-SKID-H0/NHH0
Smart PCS SKID

Support Transportation with Pallets

Hot and Cold Air Duct Isolation

Cable Integration

General Parameter	
Model	LUNA2000-PCS-SKID-H0/NHH0
Configuration Description	36 Smart PCS + 4 Power Distribution Cabinet
Max. DC Voltage	1,500 V
Rated AC Voltage	800V
Dimension (W x H x D)	6,058 x 2,896 x 2,438 mm
Weight	< 15 t
Operating Temperature Range	-25° C~ 60° C
Storage Temperature Range	-40° C~ 70° C
Operating Relative Humidity	0 ~ 100% (Non-condensing)
Max. Operating Altitude	4,700 m
Protection Class	I
Cooling Method	Smart Air Cooling
Protection Degree	IP55
Anti-corrosion Degree	C5
Standards Compliance	
IEC/EN62477-1,EN 55011, EN61000, EN/IEC 63000 etc.	

JUPITER-9000K/6000K/3000K-H1(built-in SACU) Smart Transformer Station

Simple

Prefabricated and Pre-tested, No Internal Cabling Needed Onsite
Compact 20' HC Container Design for Easy Transportation

Efficient

High Efficiency Transformer for Higher Yields, meeting class A
Lower Self-consumption for Higher Yields

Safe

Meets IEC 61641, Up to Class C arcing protection on LV side
Update the function for MV protection, Change to Upward arc discharge, Meets IEC 62271-202 IAC-A

Smart

Real-time Detection of Transformer, LV Panel and RMU
High Precision Sensor of LV Electricity Parameters
Remote Control of ACB and MV Circuit Breaker

Reliable

Robust Design against Harsh Environments
Optimal Cooling Design for High Availability and Easy O&M
Comprehensive Tests from Components, Device to Solution

Environmental protection

STS Can support natural ester vegetable oils
Environmentally friendly, easy to degrade, 98% degradable in 28 days
High flash point, > 350°C, not easily combustible
Oil-free sump design, Simplify O&M

Schematic Diagram

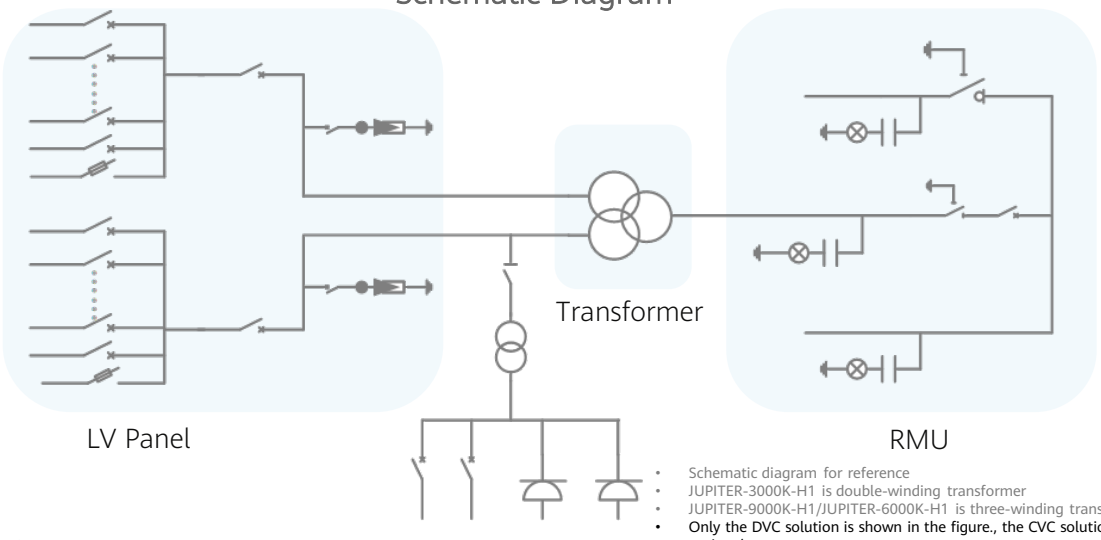

- Schematic diagram for reference
- JUPITER-3000K-H1 is double-winding transformer
- JUPITER-9000K-H1/JUPITER-6000K-H1 is three-winding transformer
- Only the DVC solution is shown in the figure., the CVC solution is optional

Technical Specifications

Technical Specifications	JUPITER-9000K-H1(built-in SACU)	JUPITER-6000K-H1(built-in SACU)	JUPITER-3000K-H1(built-in SACU)
Input			
Available Inverters / PCS	SUN2000-330KTL-H1 / SUN2000-330KTL-H2 / LUNA2000-213KTL-H0		
Max. MCCB inputs	30	22	12[1]/11
Max. LV AC Inputs	60[2]	44[2]	24[2]/12
AC Power	9,000 kVA @40℃ [3]	6,600 kVA @40℃ [3]	3,300 kVA @40℃ [3]
Rated Input Voltage	800 V		
LV Panel Segregation	Form 2b		
LV Main Switches	ACB (4,000 A, 2 x 1 pcs)	ACB (2,900 A, 2 x 1 pcs)	ACB (2,900 A, 1 x 1 pcs)
LV Main Switches [4]	MCCB (400 A, 2 x 15 pcs)	MCCB (400 A, 2 x 11 pcs)	MCCB (400 A, 11 pcs)
Output			
Rated Output Voltage	10~35 kV [4]		
Frequency	50 Hz or 60 Hz		
Transformer Type	Oil-immersed, Conservator Type		
Transformer Cooling Type	Mineral Oil：ONAN / Natural Ester：KNAN		
Transformer Tappings	± 2 x 2.5%		
Transformer Oil Type	Mineral Oil (PCB Free)/Natural ester oil（Optional)		
Transformer Vector Group	Dy11-y11		Dy11
Transformer Min. Peak Efficiency Index	Tier 1 or Tier 2 In Accordance with EN 50588-1		
RMU Type	SF_6 Gas Insulated		
RMU Transformer Protection Unit	MV Vacuum Circuit Breaker Unit		
RMU Cable Incoming / Outgoing Unit	Direct Cable Unit or Cable Load Break Switch Unit		
Auxiliary Transformer	Dry Type Transformer, 5 kVA, Single-phase, li0/50kVA，Three-phase，Dyn11（Optional)		
Output Voltage of Auxiliary Transformer	400/230/220/210V		
Protection			
Transformer Detection & Protection	Oil Level, Oil Temperature, Oil Pressure and Buchholz		
Protection Degree of MV & LV Room	IP 54		
Internal Arcing Fault of STS	Standard IAC A 20 kA 1s/ IAC A 25 kA 1s（Optional)		
MV Arc Releasing	MV Upward Arc Releasing for Higher Safety, Meets IEC 62271-202 IAC-A		
LV Arc Releasing	Meets IEC 61641 up to Class C arcing protection on LV side		
MV Relay Protection	DVC/CVC Standard 50/51, 50N/51N DVC High Standard 50/51, 50N/51N, 87, 50BF, 51G, Inrush Blocking, Watchdog, 49T (External trip), FR（Optional) CVC High Standard 50/51, 50N/51N, 49, 86, 27, 59, 79, 74, 59N, 50BF, Inrush Blocking, Watchdog, 49T(External Trip), FR（Optional)		
LV Overvoltage Protection	Type I+II		
Anti-corrosion Protection	C5-M		
Feature			
2 kVA UPS	Optional [5]		
MV Surge Arrester for Transformer	Optional [5]		
IMD License	Optional [5]		
General			
Dimensions (W x H x D)	6,058 x 2,896 x 2,438 mm (20' HC ISO Container)		
Weight	< 28 t	< 23 t	< 17 t
Operating Temperature Range	-25℃ ~ 60℃[6]		
Relative Humidity	0% ~ 95% (Non-condensing)		
Max. Operating Altitude	1,000 m[7]		
MV-LV AC Connections	Prewired and Pretested, No Internal Cabling Onsite		
	Smart Cooling without Air-across for Higher Availability		
Communication	Modbus TCP, Preconfigured with SmartACU		
Standards Compliance			
IEC 62271-202, EN 50588-1, IEC 60076, IEC 62271-200, IEC 61439-1			

1. only for GFM version
2. one MCCB can aggregate one inverter and one PCS at the same time，Max. LV AC Inputs means Theoretical number of full-access PCS
3. More detailed AC power of STS, please refer to the de-rating curve.
4. Rated output voltage from 10 kV to 35 kV, more available upon request
5. Extra expense needed for optional features which standard product doesn't contain, more options upon request.
6. When ambient temperature ≥55℃, awning shall be equipped for STS on site by customer.
7. For higher operating altitude, please consult with Huawei.

Model: JUPITER-9000K-H0 / STS-6000K /3000K-H1
Smart Transformer Station

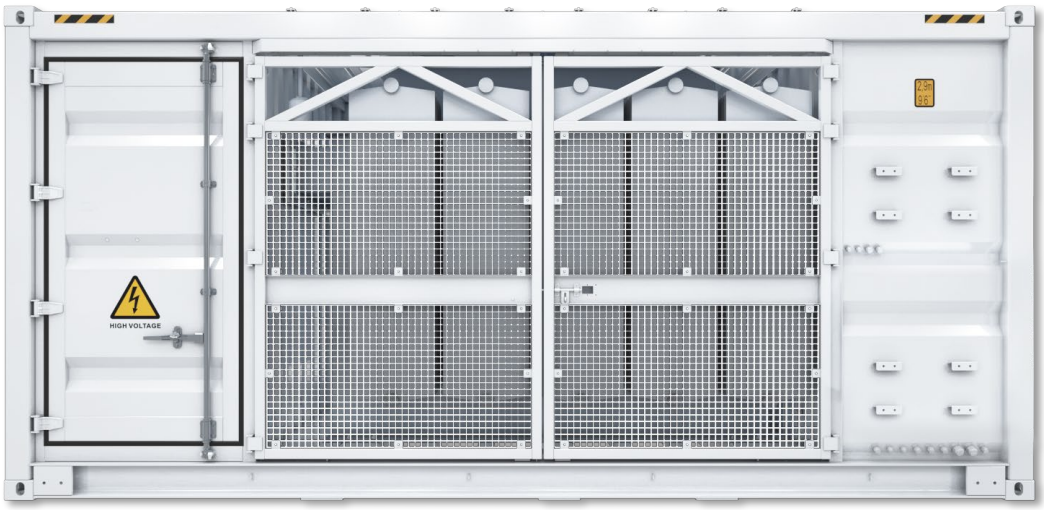

Simple

Prefabricated and Pre-tested, No Internal Cabling Needed Onsite
Compact 20' HC Container Design for Easy Transportation

Efficient

High Efficiency Transformer for Higher Yields
Lower Self-consumption for Higher Yields

Smart

Real-time Detection of Transformer, LV Panel and RMU
High Precision Sensor of LV Electricity Parameters
Remote Control of ACB and MV Circuit Breaker

Reliable

Robust Design against Harsh Environments
Optimal Cooling Design for High Availability and Easy O&M
Comprehensive Tests from Components, Device to Solution

Schematic Diagram

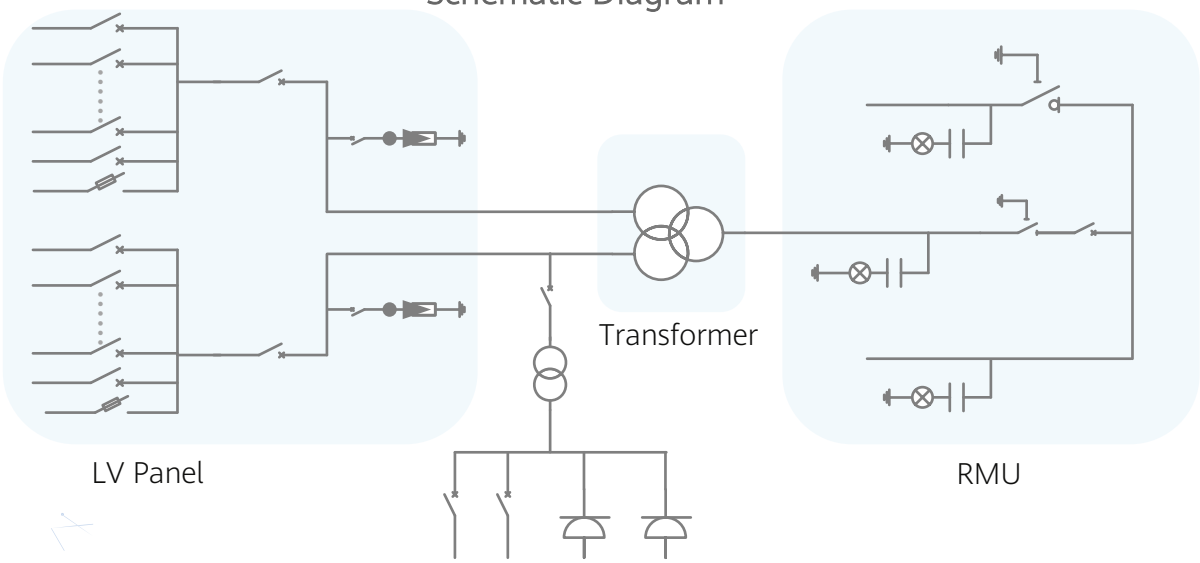

Model: JUPITER-9000K-H0 / STS-6000K/ 3000K-H1

Technical Specifications

Technical Specifications	JUPITER-9000K-H0	STS-6000K-H1	STS-3000K-H1
Input			
Available Inverters	LUNA2000-213KTL / LUNA2000-200KTL		
Max. LV AC Inputs	44	34	17
AC Power	9,000 kVA @40℃ [1]	6,800 kVA @40℃ [1]	3,400 kVA @40℃ [1]
Rated Input Voltage	800 V		
LV Panel Segregation	Form 2b		
LV Main Switches	ACB (4,000 A, 2 x 1 pcs)	ACB (2,900 A, 2 x 1 pcs)	ACB (2,900 A, 1 pcs)
LV Main Switches for LUNA2000-213KTL / 200KTL	MCCB (250 A, 2 x 22 pcs)	MCCB (250 A, 2 x 17 pcs)	MCCB (250 A, 17 pcs)
Output			
Rated Output Voltage	10~35 kV [2]		
Frequency	50 Hz / 60 Hz		
Transformer Type	Oil-immersed, Conservator Type		
Transformer Cooling Type	ONAN		
Transformer Tappings	± 2 x 2.5%		
Transformer Oil Type	Mineral Oil (PCB Free)		
Transformer Vector Group	Dy11-y11		Dy11
Transformer Min. Peak Efficiency Index	Tier 1 or Tier 2 In Accordance with EN 50588-1		
RMU Type	SF_6 Gas Insulated		
RMU Transformer Protection Unit	MV Vacuum Circuit Breaker Unit		
RMU Cable Incoming / Outgoing Unit	Direct Cable Unit or Cable Load Break Switch Unit		
Auxiliary Transformer	Dry Type Transformer, 5 kVA, Single-phase, li0	Dry Type Transformer, 5 kVA, Three-phase, Dyn11	
Output Voltage of Auxiliary Transformer	230 / 127 Vac	400 / 230 Vac or 220 / 127 Vac	
Protection			
Transformer Detection & Protection	Oil Level, Oil Temperature, Oil Pressure and Buchholz		
Protection Degree of MV & LV Room	IP 54		
Internal Arcing Fault of STS	IAC A 20 kA 1s		
MV Relay Protection	50/51, 50N/51N		
LV Overvoltage Protection	Type I+II		
Anti-rodent Protection	C5-Medium		
Features			
2 kVA UPS	Optional [3]		
MV Surge Arrester for MV VCB	Optional [3]		
General			
Dimensions (W x H x D)	6,058 x 2,896 x 2,438 mm (20' HC ISO Container)		
Weight	< 28 t	< 22 t	< 15 t
Operating Temperature Range	-25℃ ~ 60℃ [4]		
Relative Humidity	0% ~ 95% (Non-condensing)		
Max. Operating Altitude	1,000 m [5]		
MV-LV AC Connections	Prewired and Pretested, No Internal Cabling Onsite		
LV & MV Room Cooling	Smart Cooling without Air-across for Higher Availability		
Communication	Modbus TCP, Preconfigured with SmartACU2000D	Modbus RTU, Preconfigured with SmartACU2000D	
Standards Compliance			
IEC 62271-202, EN 50588-1, IEC 60076, IEC 62271-200, IEC 61439-1			

1: More detailed AC power of STS, please refer to the de-rating curve.
2: Rated output voltage from 10 kV to 35 kV, more available upon request
3: Extra expense needed for optional features which standard product doesn't contain, more options upon request.
4: When ambient temperature ≥55℃, awning shall be equipped for STS on site by customer.
5: For higher operating altitude, pls consult with Huawei.

DCBOX-9/5-H0
DC LV Panel

Electrical	
Max. Input Voltage	1,500 V
Nominal Input Voltage	1,200 V
Max. Branch Current for Battery Rack Side	321 A
Max. Branch Current for PCS Side	193 A
Number of DC Circuit Breaker	14
Max. Input Number of Battery Rack	9
Max. Input Number of PCS	5
Max. Convergence Capacity	5 x 193 A
Protection	
DC Overcurrent Protection	Yes
Environment	
Operating Temperature Range	-30°C ~ 60°C
Relative Humidity	0 ~ 100% (Non-condensing)
Max. Operating Altitude	4,000 m
General	
Cable Entries	Top in for PCS & Bottom in for Battery Rack
Dimensions (W x H x D)	2,040 x 1,415 x 975 mm
Weight (Without Smart PCS)	≤ 750 kg
DC Connector / AC Connector	OT Terminal
Protection Degree	IP55
Installation Options	Grounding

1 -The DCBOX can work with the LUNA2000-200KTL series models.

Model: DTS-200K-D0
Distribution Transformer

Electrical	
AC Power	210 kVA@ 400 Vac / 4 kVA@ 110 Vac
Rated Input Voltage	800 Vac
Max. Input Current at Nominal Voltage	151.6 A
Rated Output Voltage	400V (3P) /110V (1P)
Rated Frequency	50 / 60 Hz
Transformer Type	Dry Type
Transformer Cooling Type	AF
Transformer Vectoring Group	Dyn11yn11
Transformer Tappings	± 2 x 2.5%
Transformer Winding	Al
Transformer Insulation Class	H
Transformer Impedance (at 145°C)	4% (±10%) @50Hz / 4.8% (±10%) @60Hz
Transformer No-load Loss	≤ 500 W (+15%)
Transformer Load Loss	≤ 3,044 W (+15%)
Cablings	
Number of outputs	Five MCCBs, each connected to two outputs
Cabling mode	Routed in and out from the bottom
Protection	
Protection Degree	IP 55
LV SPD	Type II
Transformer Protection	Transformer Temperature Protection
Environment	
Operating Temperature Range	- 30℃ ~ 55℃
Relative Humidity	0% ~ 95% (Non-condensing)
Max. Operating Altitude	4,000 m
General	
Dimensions (W x H x D)	900 x 2,100 x 1,200 mm
Weight	< 1.3 t
Communication Mode	Dry Contacts
Cooling Type	Smart Cooling without Air-across for Higher Availability
Standards Compliance	
IEC 60076, IEC 61439	

Model: SmartACU2000D
Smart Array Controller

With SmartPID2000 Module

Smart

Support one-click commissioning
Patented anti-PID module

Simple

SmartPID2000 & Smartlogger3000B
pre-installed with multiple interfaces

Reliable

Industrial-level application
and high reliability

Technical Specifications	
SmartLogger	SmartLogger3000B x 1
SmartModule1000A	Standard with 1
RS485	COM x 6, 1,200 / 2,400 / 4,800 / 9,600 / 19,200 / 115,200 bps
Number of MBUS Module [1]	2
Number of SmartPID2000	2
Switch with 4*SFP and 8*100 / 1,000 Mbps	2
Electrical	
AC Input Voltage for Cabinet	100 V ~ 240 V, L / N (L)+ PE
AC Input Voltage for MBUS	380 V ~ 800 V, 3Ph
AC Input Voltage for PID	380 V ~ 800 V, 3Ph + FE (Functional Earth)
AC Input Frequency	50 Hz / 60 Hz
Power Supply	Standard: 12 V DC
Environment	
Operating Temperature Range	- 40℃ ~ 60℃
Relative Humidity	0% ~ 100% (Non-condensing)
Max. Operating Altitude	4,000 m
Mechanical	
Dimensions (W x H x D)	880mm×770mm×369mm
Weight	66 kg
Protection Degree	IP65
Installation Options	Wall Mounting, Rack Mounting, Pole Mounting
Cable Entries	Bottom in & out
Maintenance	Front

1: Compatible with communication mode of PLC (Power Line Communication).

Model: SmartPID2000 Module
Inside Smart Array Controller

The SmartPID2000 Module is installed in the SmartACU2000D cabinet and support continuous DC & AC insulation detection with optional Smart IMD.

Smart

Data read and software upgrade through USB or the embedded Web

Safe & Reliable

Inject LV AC voltage to earth
Continuous DC & AC insulation detection with optional Smart IMD

SmartPID2000 Solution Diagram

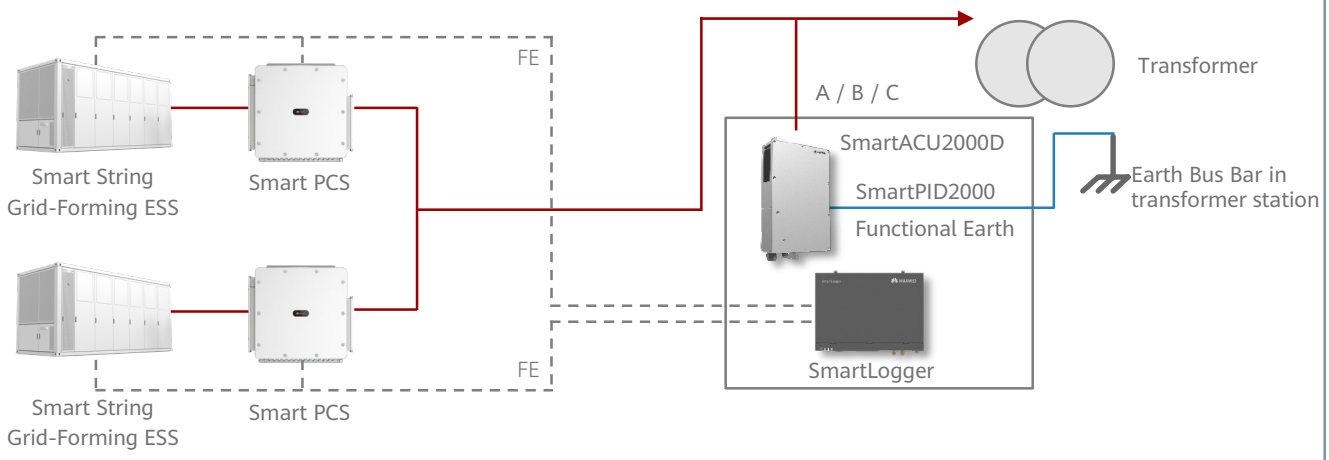

Note:
1 - The SmartPID module could ONLY be deployed in utility scenarios where the LV sides of transformer stations are IT system.
2 - The SmartPID module must work with FusionSolar SmartLoggers and smart PV controllers / smart PCS.

Model: SmartPPC2000
Smart Power Plant Controller

SPPC2000

POC PT/CT direct sampling

PV&ESS Synergy

Fast Power Response

Power Oscillation Damping

Technical Specifications	SPPC2000-A01	SPPC2000-A02
Device Management		
Networking Mode	Active/Standby and Master-Slave Control Mode	
Features		
Smart Reactive Power Compensation	System-level 30ms-40ms Dynamic Reactive Power Response	
Low frequency oscillation suppression	0.1~2.5 Hz	
Waveform Recording Function	Current/voltage instantaneous value recording, rms long-term recording	
Time Synchronization Function	IRIGB (≤ 1 ms) and Other Time Synchronization Protocols (e.g., NTP)	
Auxiliary AGC/AVC adjustment control	Yes	
Breaker Status Acquisition and Control	Yes	
Simulation Model	PSSE, DigSILENT, PSCAD	
PT/CT Sampling current	1A	5A
Communication Interface		
Ethernet	6 + 2	
Optical Ethernet	SFP x 2, 100 / 1,000 Mbps	
RS485	COM x 4	
Current/Voltage Sampling	6U + 6I	
CAN	2	
Communication Protocol	Modbus-TCP, IEC60870-5-104, GOOSE	
Interaction		
WEB	Yes	
HMI	Smart PV Management System / Smart Plant Management System	
General		
Dual Power Supply	AC: 90 V ~ 264 V, 47 Hz ~ 63 Hz, DC: 110 V ± 10%, 220 V ± 10%	
DC/AC Surge Arrester	Type II	
Dimensions (H x L x W)	1000 x 650 x 650 mm (Within Base 100mm)	
Weight	≤ 80 kg (Without Pallet and Optional Components)	
Operating Temperature Range	-25℃ ~ 60℃	
Relative Humidity	0% ~ 100% (Non-condensing)	
Max. Operating Altitude	4,000 m	
Protection Degree	IP55	
Anti-corrosion Protection	C5-Medium	
Installation Options	Floor Mounting, Wall Mounting (Optional)	

Please confirm the available countries with Huawei Fusionsolar engineers

Model: SmartPMS2000
Smart Plant Management System

Comprehensive management

Multi-level refined management
Second-level performance curve drawing

Efficient collaboration

Power generation plan curve
PV&ESS synergy optimization

Intelligent diagnosis

Full-link multi-dimensional plant diagnosis
Cell/module fault pre-warning

Safe and reliable

IEC62443 certification.
99.99% availability

PMS cabinet	
Dimensions (W x D x H)	600mm×2200mm×1200mm (47u)
Operating Temperature Range	5 - 30°C
Protection Supply	IP20
Weight	Net weight approx. 210 kg, full configuration approx. 600 kg
AC Input Voltage	200V~240V
Rated Frequency	50 / 60 Hz
Max. Operating Altitude	4,000 m

Server	
Model	TaiShan 200 (2280)
Dimensions (W x D x H)	482.6mm*790mm*88.9mm. (2U)
CPU	2*Kunpeng 920 - 48core @2.6GHz
Database	GaussDB
Operating system	EulerOS
Memory	4*64G
Hard Disk	8*1.92T SATA SSD
Fans	Four hot-swappable fans in N+1 redundancy
External Interface	8*GE
Power supply	2 x 900 W, 1+1 Redundancy
Weight	Approx. 30 kg
Certification	CCC/CE, etc.

Switches		
Model	CloudEngine S5735-S24ST4XE-V2	CloudEngine S5735-S24T4XE-V2
Dimensions (W x D x H)	420mm*442mm*43.6mm (1U)	420mm*442mm*43.6mm (1U)
Net Weight	4.95 kg	4.34 kg
Memory	2 GB	2 GB
Power Supply	2*80W, 1+1 redundancy	2 x 80 W, 1+1 redundancy
Interface	Eight gigabit electrical ports, four 10GE optical ports, and 24 gigabit optical ports	24 GE electrical ports and 4 10GE optical ports
Rated Voltage	100V AC~240V AC; 50/60Hz	100V AC~240V AC; 50/60Hz
Certification	CE/VCCI, etc.	CE/VCCI, etc.

**EMS will be available in Q1.25*

Network Applications

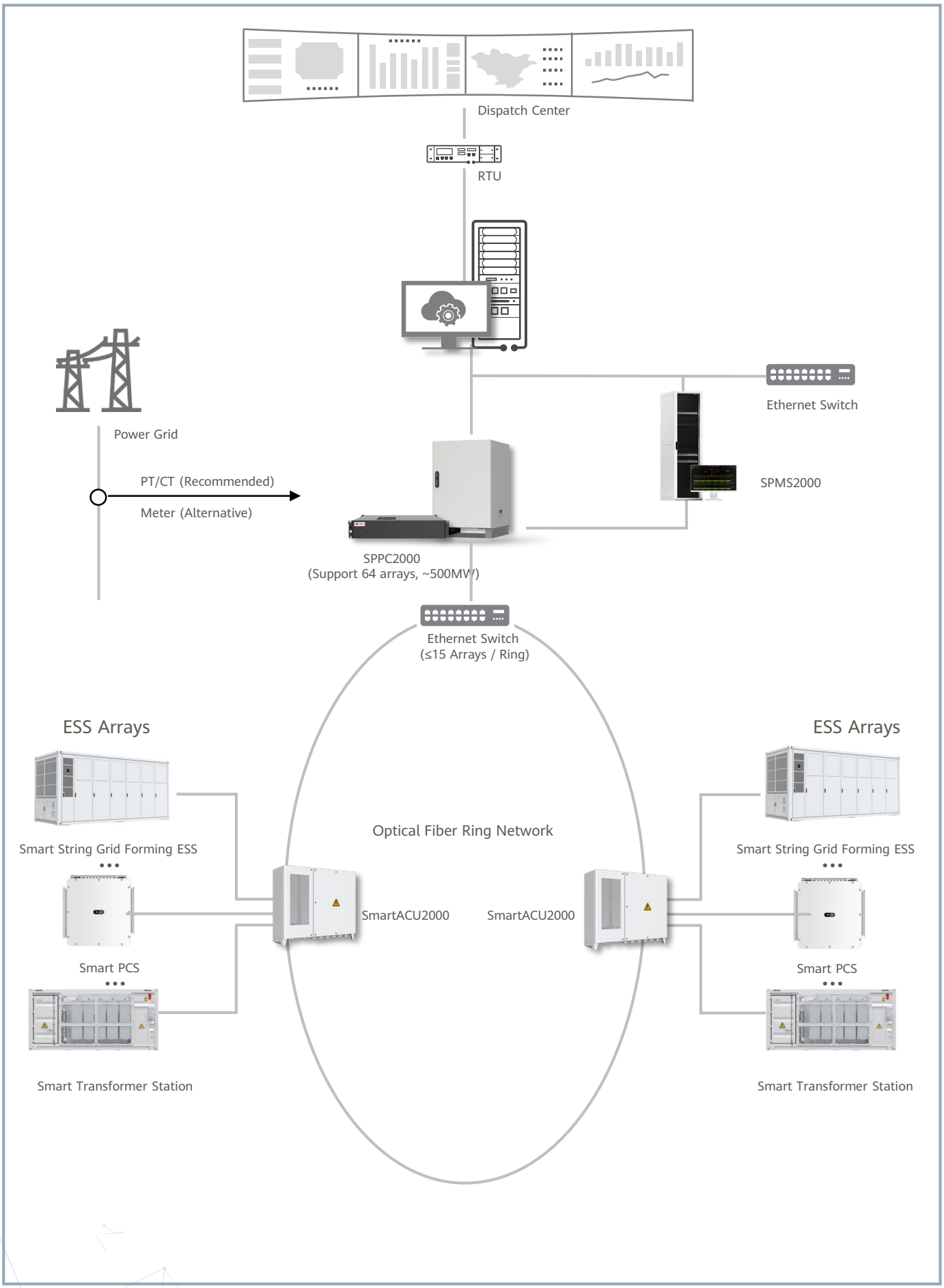

*For details about the project configuration and sales area, contact Huawei engineers.
SPPC does not support the PV & ESS low-voltage AC coupling solution.

Success Cases

400 MW PV + 1.3 GWh BESS

World's largest microgrid ESS plant

100% renewable energy
World's first GW-level grid-forming PV & ESS plant
GW-level black start and continuous fault traversal

COD: 2023
Location: Saudi Arabia

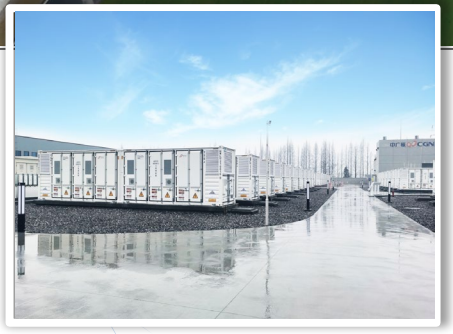

100MW PV + 200MWh BESS

Largest smart string energy storage plant in China

"String Energy Storage + Cloud BMS"
Introduce the hybrid business model of "peak-valley price difference + leasing"

COD: Dec, 2022
Location: Hubei, China

Success Case

25MW PV + 50MWh BESS

First Large Scale String Inverter + String Energy Storage Demonstration Project in Hainan

More than 174 million kWh of clean energy provided to Wenchang and Hainan power grids annually

COD: Apr, 2022
Location: Hainan, China

115MW PV + 146MWh BESS

Spinning Reserve, Frequency Regulation

One-cluster-one-management, constant power output for a longer time, achieving higher frequency modulation benefits
Automatic SOC calibration greatly reduces O&M costs

COD: Nov, 2022
Location: Singapore

Copyright © Huawei Technologies Co., Ltd. 2024. All rights reserved.
No part of this document may be reproduced or transmitted in any form or by any means without prior written consent of Huawei Technologies Co., Ltd.

Trademark Notice

, HUAWEI, and are trademarks or registered trademarks of Huawei Technologies Co., Ltd.
Other trademarks, product, service and company names mentioned are the property of their respective owners.

General Disclaimer

The information in this document may contain predictive statements including, without limitation, statements regarding the future financial and operating results, future product portfolio, new technology, etc. There are a number of factors that could cause actual results and developments to differ materially from those expressed or implied in the predictive statements. Therefore, such information is provided for reference purpose only and constitutes neither an offer nor an acceptance. Huawei may change the information at any time without notice.

HUAWEI TECHNOLOGIES CO., LTD.
Huawei Industrial Base, Bantian Longgang
Shenzhen 518129, P.R. China
Tel: 400-822-9999
Solar.Huawei.com

The text and figures reflect the current technical state at the time of printing. Subject to technical changes. Errors and omissions excepted. Huawei assumes no liability for mistakes or printing errors. For more information, please visit solar.huawei.com. Version No.:01-(202304)